back

vertex flue kit installation

Classic FF

Your Ideal installation guide

When replacing any part on this appliance use only spare parts that you can be assured conform to the safety and performance specification that we require. Do not use reconditioned or copy parts that have not been clearly authorised by Ideal Boilers.

Ideal BOILERS

ENGINEERED FOR PEACE OF MIND

The Vertex Flue Kit is suitable for the following boilers:

Classic FF 360 ..... GC No. 41 391 97
Classic FF 380 ..... GC No. 41 391 99
Classic FF 360 P ... GC No. 41 392 07
Classic FF 380 P ... GC No. 41 392 08
RD1 360 ..... GC No. 41 392 20
RD1 380 ..... GC No. 41 392 24

DESCRIPTION

The Vertex Flue Kit allows the above gas fired boilers to be sited in positions where no access to an outside wall is available.

The kit allows the concentric flue / air duct to run vertically from the top of the boiler or from the side (if used in conjunction with a 90° Flue Elbow Kit) and terminate for air supply within the roof space. The duct then continues to rise, through the use of proprietary flue components, to the exterior of the building.

Notes.

- *These instructions must be read in conjunction with the Installation & Servicing Instructions supplied with the boiler being installed.*
- *Connection to any Classic FF and RD1 boiler fitted with a sealed system unit CAN ONLY BE MADE FROM THE SIDE OR BACK.*

AIR SUPPLY

The roof space MUST be ventilated to the outside with a permanent vent. The minimum effective area of the vent is given in Table 1.

Table 1

Boiler Size	Minimum vent area cm²	(in.²)
FF 360, FF 360 P & RD1 360	69	(11)
FF 380, FF 380 P & RD1 380	102	(16)

1 UNPACKING

Unpack the kit and check the contents.

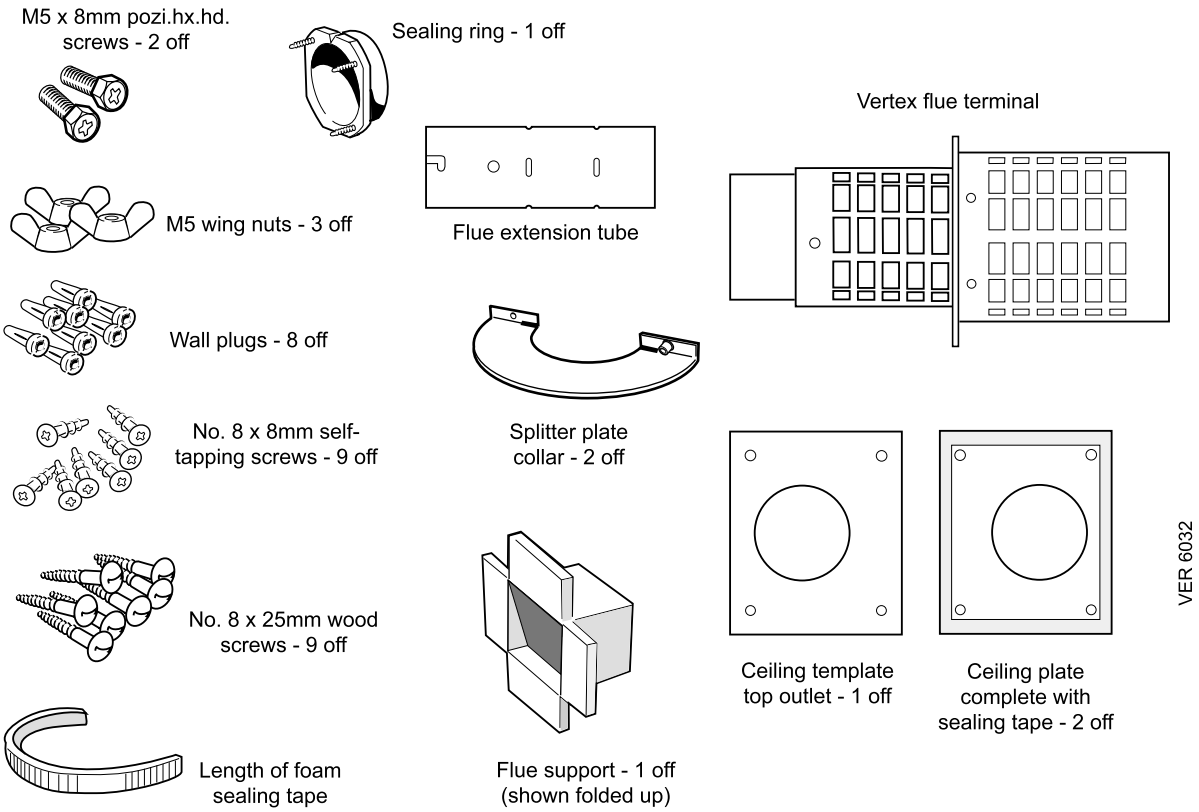

2 FLUE ARRANGEMENT - *Top outlet only*

Note. *The arrangement shown is NOT suitable for boilers fitted with a sealed system unit.*

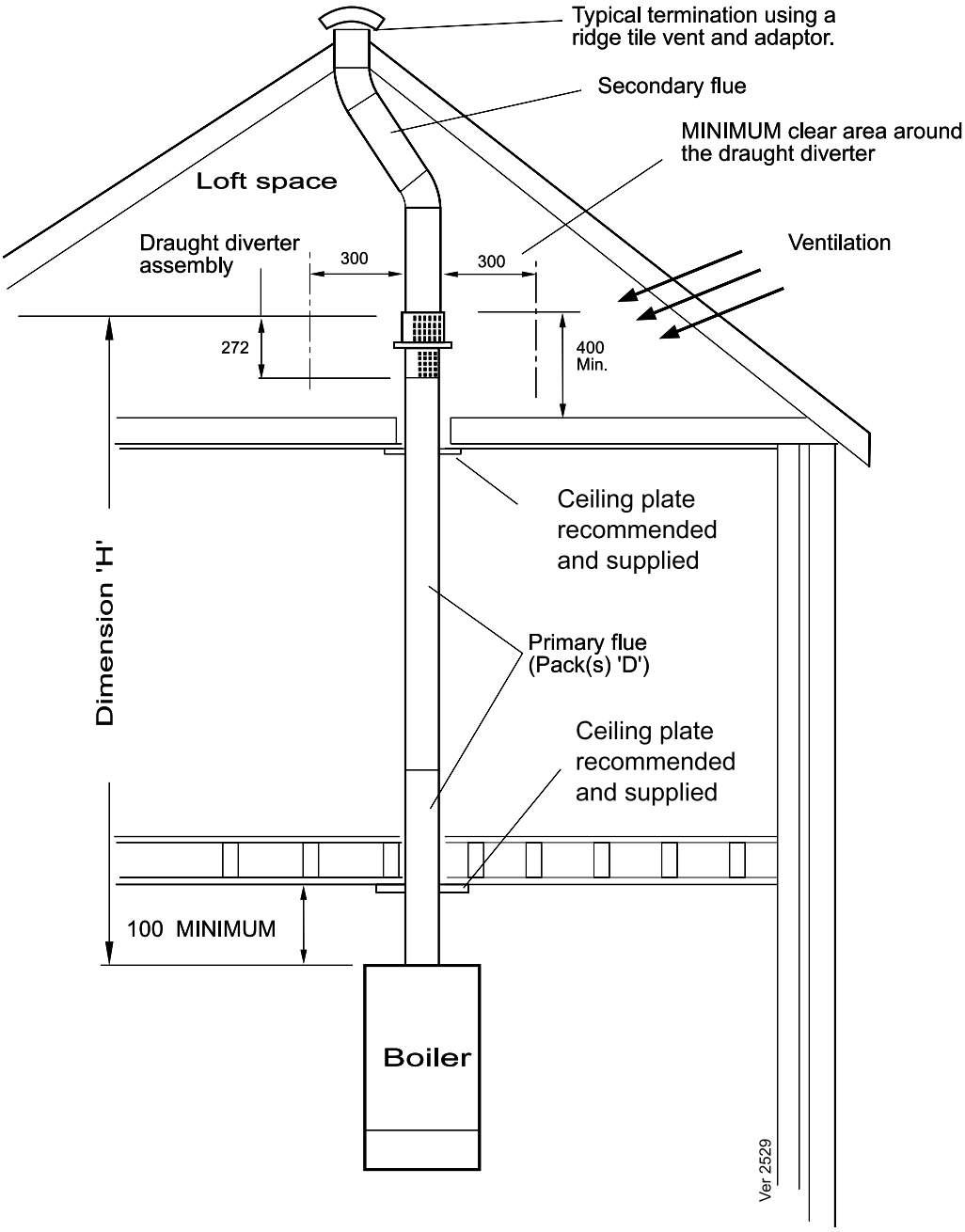

All dimensions are in mm.

Boiler	Primary flue length *Dimension H*
Classic FF 360, 380 **Classic FF** 360P, 380P **RD1** 360, 380	4 metres

Primary Flue Length - *Dimension H*
This table gives the MAXIMUM primary flue lengths (i.e. the length of flue between the boiler and the draught diverter, situated in the loft space) which may be used with the **Vertex Flue Kit**.

Secondary Flue Length
Details of the MAXIMUM secondary flue lengths are given in Frame 4.

3 FLUE ARRANGEMENT - *Side outlet only*

Note. *The arrangement shown is suitable for boilers fitted with a sealed system unit.*

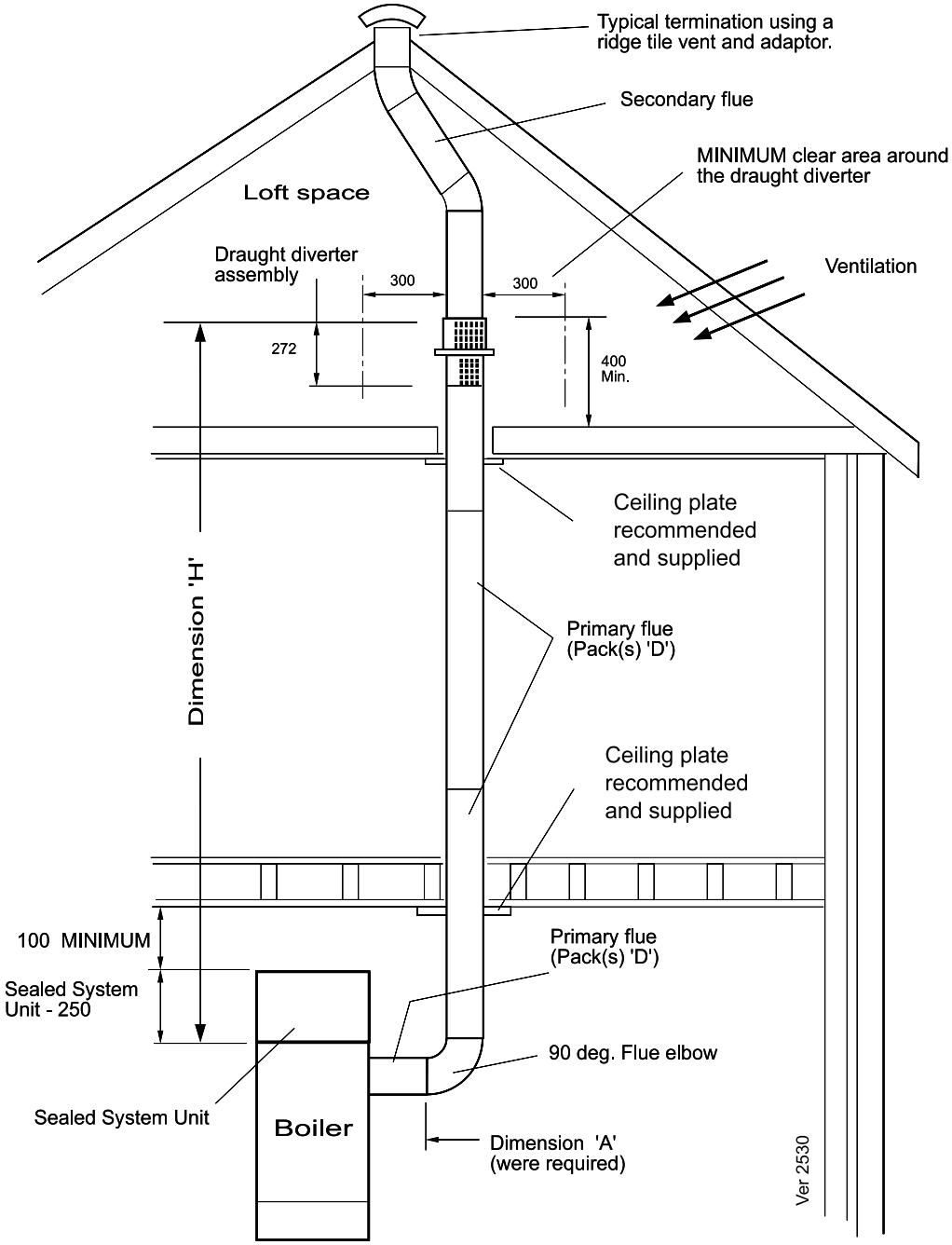

All dimensions are in mm.

Boiler	Primary flue length *Dimensions A + H*
Classic FF 360, 380 **Classic FF** 360P, 380P **RD1** 360, 380	3 metres

Primary Flue Length - *Dimensions A + H (when used with one 90° flue elbow)*
This table gives the MAXIMUM primary flue lengths (i.e. the length of flue between the boiler and the draught diverter, situated in the loft space) which may be used with the **Vertex Flue Kit**

Note. *The 90° flue elbow can fit directly on to the side of the boiler (dimn. A = 0) with the adaptor supplied with the Sealed System Kit.*

Secondary Flue Length
Details of the MAXIMUM secondary flue lengths are given in Frame 4.

4 SECONDARY FLUE LENGTH

The following table gives the MAXIMUM (straight) secondary flue lengths which may be connected to the **Vertex Flue Kit.**

The minimum length of vertical secondary flue must exceed 1 metre.

Boiler	Model	MAXIMUM secondary flue length at maximum boiler input
Classic	FF 360 FF 380	6 m 7 m
Classic	FF 360 P FF 380 P	6 m 7 m
RD1	360 380	6 m 7 m

Suitable secondary flue systems are available from:

- Rite Vent Ltd.
  Crowther Industrial Estate
  Washington
  Tyne and Wear
  NE38 OAQ

  Tel: 0191 416 1150

  - using the twin wall B vent (4") system.

- Selkirk Metalbestos
  Pottington Industrial Estate
  Barnstaple
  Devon
  EX31 1LZ

  Tel: 01271 22551

  - using the IL 4" system.

The secondary flue MUST be installed - and should terminate - in accordance with the recommendations of BS. 5440:1.

The **Vertex Flue Kit** outlet connection socket is suitable for flue pipe conforming to BS. 715.

5 FLUE PACKS REQUIRED

Determine the primary flue length required - refer to Frames 2 and 3.

The table below give details of the flue packs needed:

Primary flue length	Flue packs required
up to 1222 mm (up to 48")	Vertex Kit plus 1 x Pack D
1222 to 2172 mm (48 to 85 1/2")	Vertex Kit plus 2 x Pack D
2172 to 3122 (85 1/2 ") to 123")	Vertex Kit plus 3 x Pack D
3122 to 4000 (123 to 157 1/2")	Vertex Kit plus 4 x Pack D

Pack D

- Length of flue and air duct
- Flue duct support

Hardware Pack

- No. 10 x 2" screw
- Wall plug
- No. 10 x 3 1/2" screw
- No. 8 x 8 self tapping screws - 3 off
- Connectors - 2 off
- Support bracket
- Adjusting bracket
- Support bracket extension
- M5 x 10 screws - 2 off

90° Elbow Kit

- 90° elbow

For side/rear outlet applications note that a 90° elbow is equivalent to 1m of primary flue.

To fit the elbow to the boiler side outlet use either the adaptor supplied with the Sealed System Kit or D-pack extension duct (cut to required length).

6 UNPACKING THE BOILER

Unpack the boiler - refer to Frame 1 of the Installation and Servicing Instructions supplied with the boiler.

7 VERTEX FLUE ASSEMBLY (*Top outlet*) - Exploded view

LEGEND

1. Secondary flue
2. Downdraught relief grille
3. Air intake grille
4. Extension duct (D pack)
5. Wall plugs (yellow)
6. Ceiling plate (with sealing tape)
7. No. 8 x 25mm screws
8. No. 8 x 8mm self tapping screws
9. Boiler sealing ring
10. Flue extension tube
11. Fan assembly
12. 90° flue elbow
13. Blanking plate
14. Sealing tape

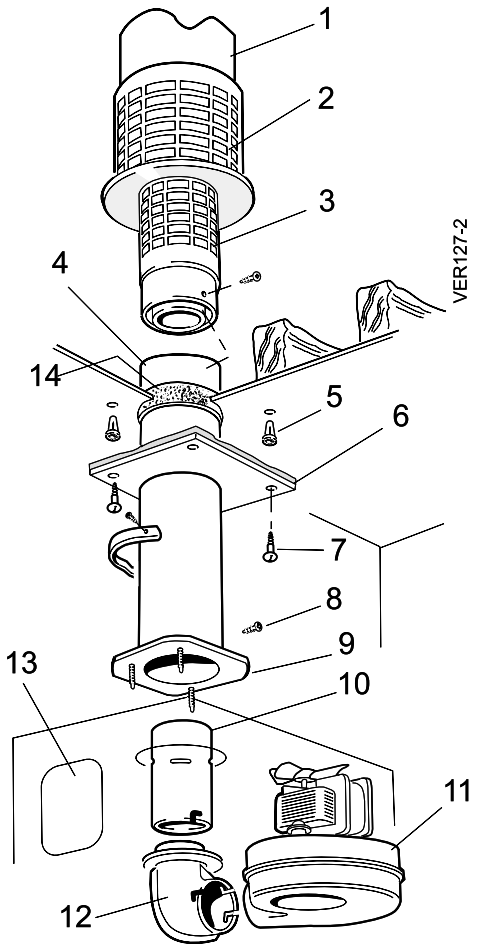

8 VERTEX FLUE ASSEMBLY (*Side outlet*) - Exploded view

LEGEND

1. Secondary flue.
2. Downdraught relief grille.
3. Air intake grille.
4. Extension duct (D pack).
5. Wall plugs (yellow).
6. Ceiling plate (with sealing tape).
7. No. 8 x 25mm screws.
8. 90° Elbow Kit.
9. Adaptor (supplied in Sealed System Kit).
10. Extension duct (D pack).
11. Boiler sealing ring.
12. Flue extension tube.
13. 90° flue elbow.
14. Blanking plate.
15. Fan assembly.
16. Sealing tape.

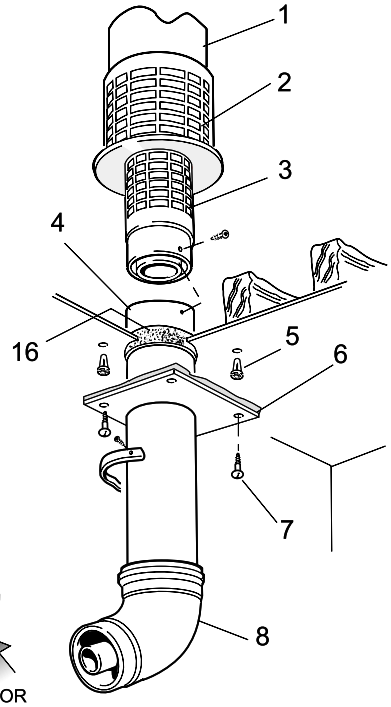

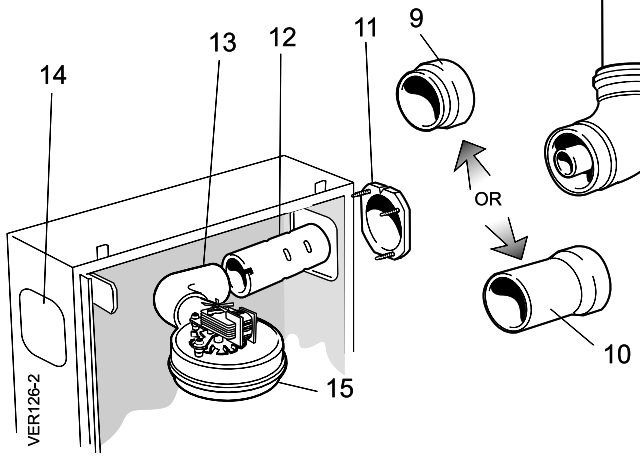

Note. *The extension duct (10) may not be required. In this instance, the 90° elbow can be fitted directly on to the boiler sealing ring (11) with the adaptor (9).*

9 MINIMUM CLEARANCES

The following minimum clearances (mm) must be maintained for operation and servicing. Additional space will be required for installation, depending upon site conditions.

In addition, a minimum of 450mm must be available at the front of the boiler to enable the appliance to be serviced.

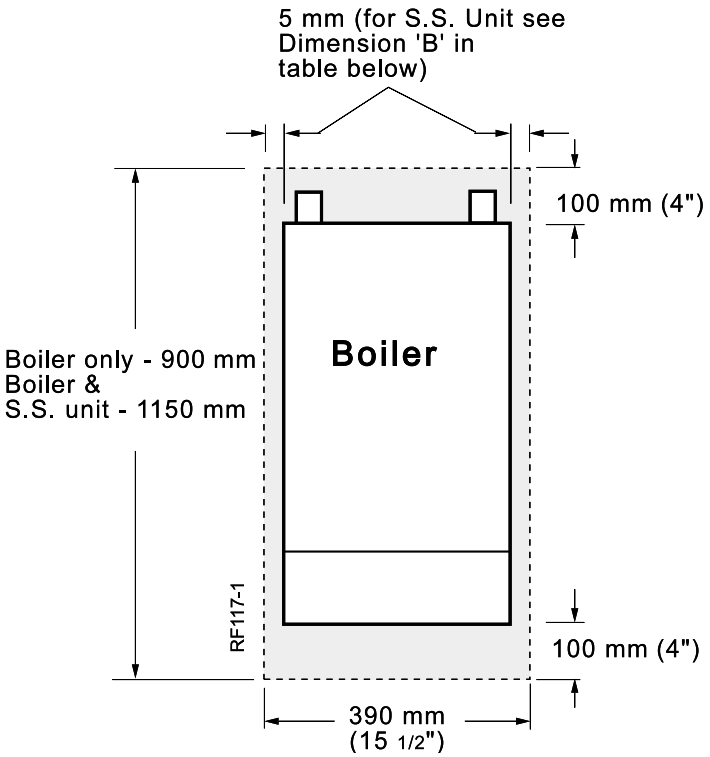

Dimn.	Flue side	Non-flue side
B	200mm	40mm

10 FLUE POSITION

Before commencing to install the boiler ensure that the vertical flue will have an unimpeded STRAIGHT run from the boiler to the draught diverter (refer to Frames 2 and 3) and that the secondary flue can be installed with sufficient vertical length.

Note. *The draught diverter must be unobstructed, as shown in Frames 2 and 3.*

11 ASSEMBLY PROCEDURE

The assembly procedure of the Vertex flue will depend upon the installation conditions.

When the flue passes through only one ceiling then the assembly of the flue may be possible prior to installation. It is, however, recommended that initial installation of the boiler is carried out in order to assist the accurate cutting of flues, etc.

If the flue is to pass through 2 ceilings then the assembly of the flue will have to be in situ, building the flue up from the top of the boiler.

IMPORTANT

When calculating flue lengths allowance has to be made for the removal of the swaged end. Refer to Frame 17.

12 TEMPLATES

USING THE CEILING TEMPLATE - ***top outlet flues***

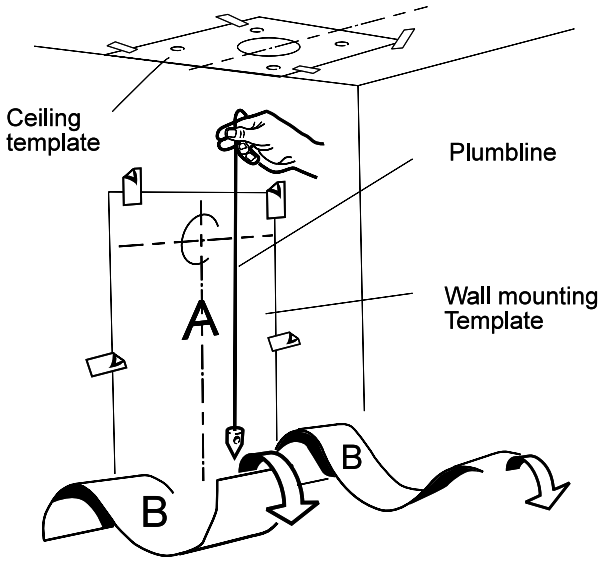

USING THE CEILING TEMPLATE - ***side outlet flues***

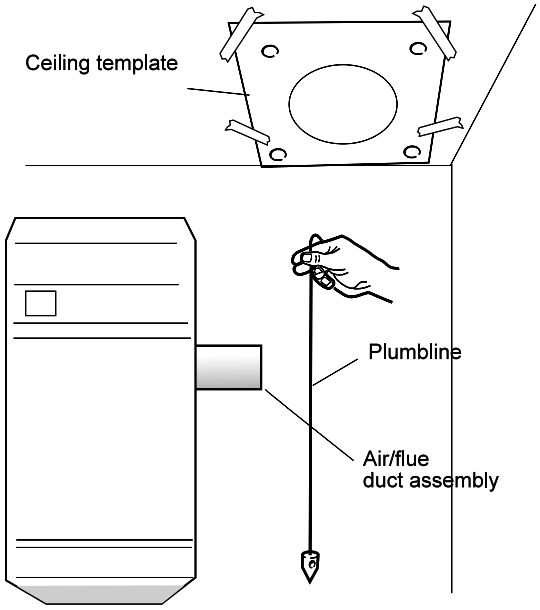

Note. *Fold or cut the template on the required line, to suit the boiler arrangement, e.g. boiler with or without stand-off brackets or Combi FF boiler with or without stand-off brackets*

1. Remove the boiler casing, as described in the Installation & Servicing Instructions supplied with the boiler.
2. Discard both sections B of the template, cutting the sides so that 15mm remains outside of the boiler width.
3. Tape the wall template into the selected position.
4. Ensure squareness by hanging a plumbline, as shown.
5. Continue the centre line on the wall template upward to the ceiling.
6. Mark on to the wall the mounting plate screw positions.

SIDE OUTLET FLUE ONLY

7. Mount the boiler on the wall and connect the horizontal flue duct assembly. Refer to the Installation & Servicing Instructions supplied with the boiler.

   Tape the ceiling template to the ceiling, as shown, with the appropriate edge against the wall.

TOP OUTLET FLUE ONLY

8. Tape the appropriate ceiling template to the ceiling, as shown, with the appropriate edge against the wall and with boiler centre lines touching.

SIDE AND TOP OUTLET FLUE

9. Mark off the 4 ceiling plate fixing screw positions and the flue duct hole in the ceiling. Remove the templates.
10. Drill and plug the 4 fixing holes in the wall with an 8mm (5/16") masonry drill and the brown plastic plugs provided.
11. Cut (as neatly as possible) the flue duct hole in the ceiling (150mm dia.).
12. Drill and plug the 4 fixing holes in the ceiling with a 6mm (1/4") masonry drill and the yellow plastic plugs provided.

    Depending upon the ceiling condition, etc., an alternative method of fixing may be required.
13. If the primary flue is to pass through a second ceiling then extend a line vertically from the centre of the hole in the first ceiling / floor to the next ceiling.

    Repeat steps 8, 9, 11 and 12 for the second ceiling.

Special note

A. *The maximum length of primary flue given in Frames 2 and 3 must not be exceeded and the secondary flue must not commence until the flue is in the roof space.*

B. Side outlet only

If a horizontal primary flue run is required before fitting the 90° elbow the maximum length of vertical primary flue MUST be reduced by the equivalent amount of horizontal primary flue run.

13 FAN OUTLET ARRANGEMENT

Rearrange the outlet elbow to suit either a left hand side, a right hand side or top outlet as shown below. For rear outlet the elbow is not needed, the flue extension tube fits directly onto the fan.

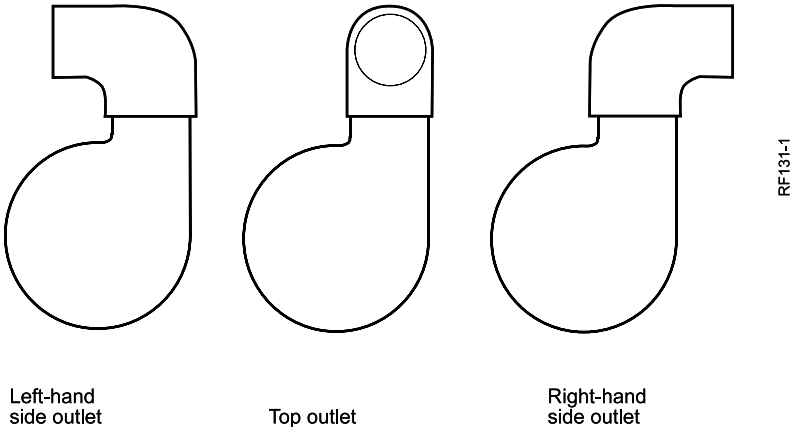

14 FLUE ASSEMBLY - *Top outlet*

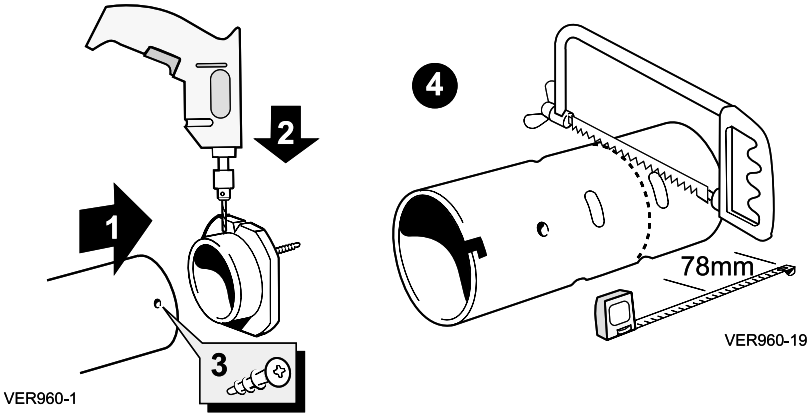

Refer to Frame 7.

IMPORTANT. READ INSTRUCTIONS 1-16 BEFORE COMMENCING WORK.

1. Fit the boiler sealing ring inside the outer flue duct and ensure it is fully engaged.
2. Drill 3 equally spaced 3.2 mm holes through the outer flue duct and the boiler sealing ring. **Do NOT drill the inner flue duct.**
3. Secure the outer flue duct to the boiler sealing ring with the screws provided.

   Note.
   If this duct is going to fit directly to the Vertex flue terminal then remove the swaged end, as paragraphs 9 and 10.

4. Shorten the flue extension tube by 78mm.
5. Push the flue extension tube fully over the open end of the inner flue duct.

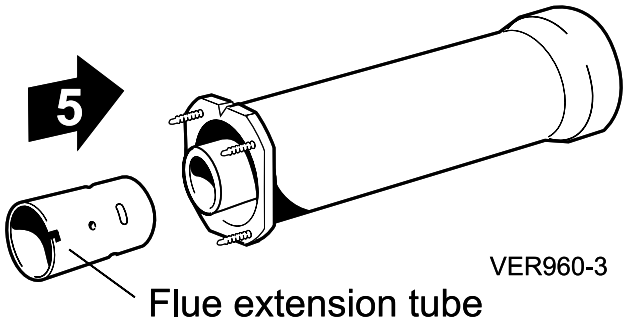

6. Fit the sealing ring and extension duct to the boiler top flue outlet and secure with the wing nuts provided.
7. Pull the flue extension tube downward and engage with the 90° flue elbow.

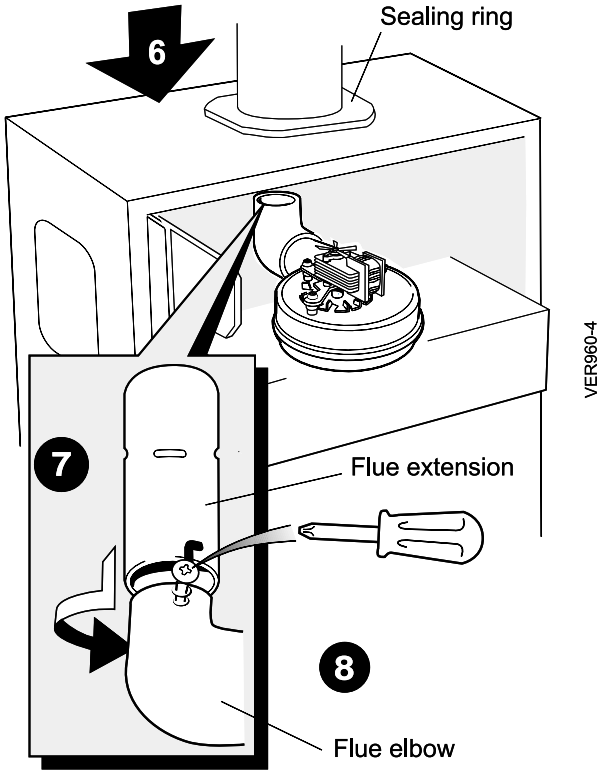

15 FLUE ASSEMBLY - *Top outlet* *continued*

8. Tighten all screws on the fan outlet / flue elbow and the flue elbow / flue extension tube.

9. Saw 60mm off the swaged end from the inner flue duct of the D pack that fits into the Vertex terminal. Use the cardboard flue support provided to aid cutting.

10. Saw 60mm off the swaged end from the outer flue duct of the D pack that fits into the Vertex terminal. Use the cardboard flue support provided to aid cutting.

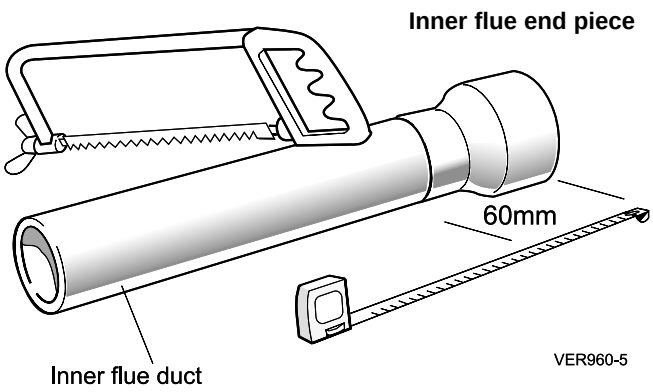

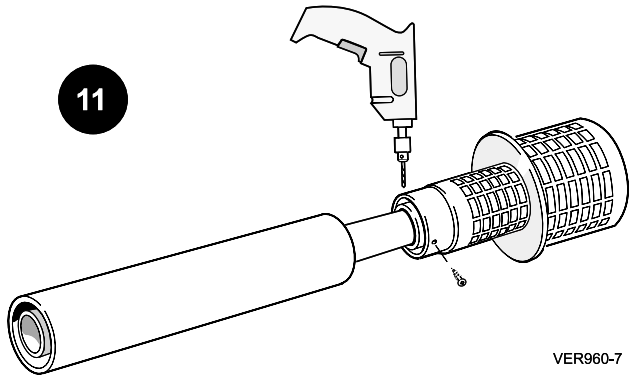

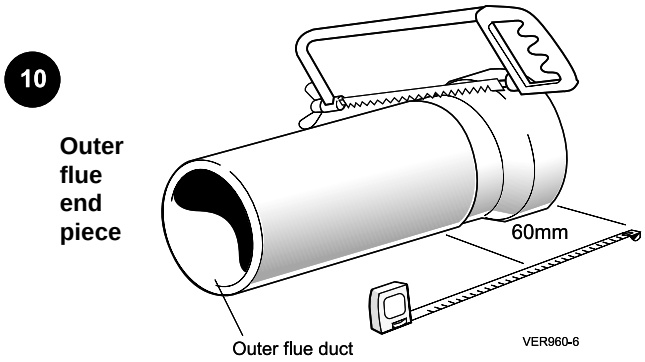

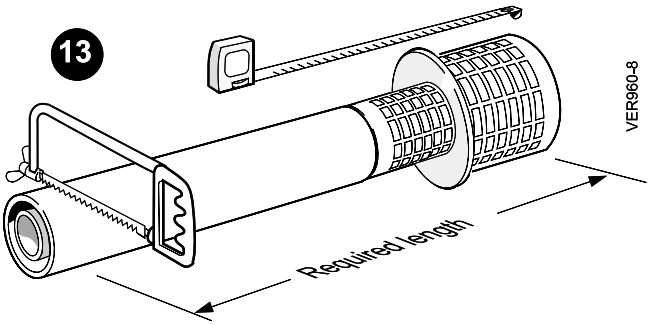

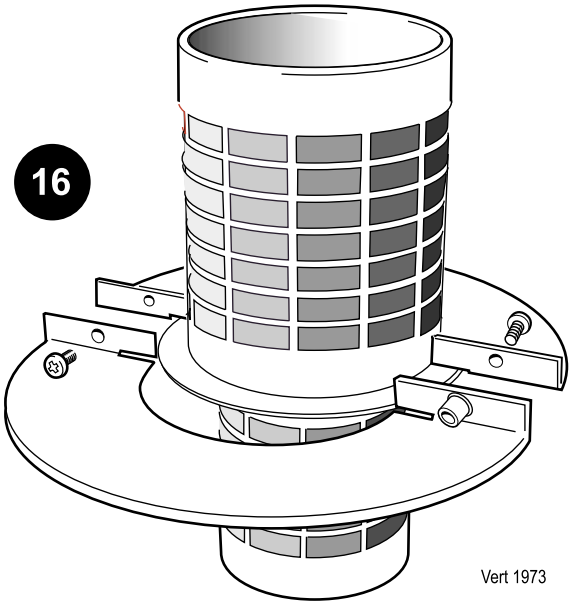

11. Fit the inner and outer ducts (without the swaged ends) to the Vertex flue terminal and secure by drilling 3 equally spaced 3.2mm holes through the outer flue duct and the Vertex flue terminal. Secure with screws provided. **Do not drill the inner flue duct.**

12. Fit further D pack extension ducts between the boiler and the Vertex flue terminal as required to achieve the desired flue length (Refer to Frames 2, 3 & 5).

13. Cut the free end of the extension duct inner and outer ducts to the required length (if required). The inner duct must finish flush with the outer duct. Use the cardboard flue support provided to aid cutting.

14. Where the flue passes through the ceiling into the roof space stick the length of foam sealing tape (provided) around the flue, in order to seal the gap between the flue and the ceiling before fitting the ceiling plate.

15. Where the flue passes through a ceiling, a ceiling plate should be fitted, using the plugs and screws provided. The plate can be fitted during or after assembling the flue.

16. Attach the split plate collar to the flue terminal with the 2 screws provided (locating the slots over the terminal split plate) when the flue is in position through the ceiling.

17. Fit a secondary flue system. Refer to Frame 4.

16 FLUE ASSEMBLY - *Side and rear outlet*

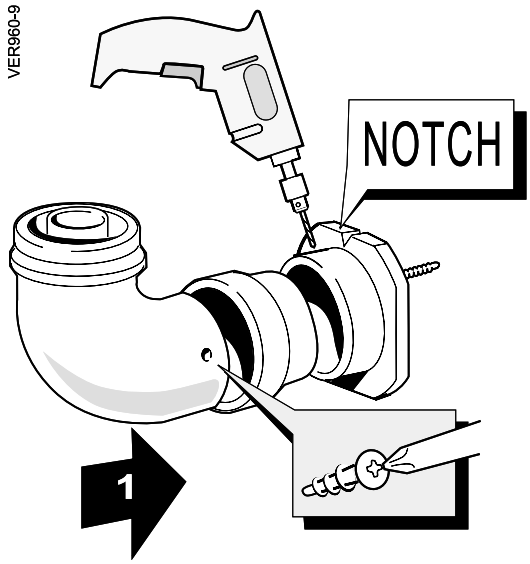

Refer to Frame 8

With a side or rear flue outlet **a 90° elbow kit** will be required. The elbow can be fitted directly onto the side / rear of the boiler with the adaptor supplied with the Sealed System Kit. Alternatively a horizontal run of flue duct can be fitted to the side / rear of the boiler before fitting the elbow kit.

FITTING THE ELBOW KIT DIRECT TO THE BOILER

1. Fit the adaptor to the sealing ring. Drill 3 - 3.2mm holes through the adaptor and sealing ring and secure using the screws provided.

2. Fit the elbow into the adaptor, ensuring that the elbow is correctly orientated. The assembly can be temporarily fitted to the boiler to check orientation. Secure using the method described in paragraph **1**.

3. Fit the flue extension tube fully over the elbow inner flue duct.

4. Fit the assembled sealing ring, elbow and flue extension tube to the boiler flue outlet and secure with the wing nuts provided.

5. Pull the flue extension tube forward and engage with the 90° flue elbow.

6. Fit further D pack extension ducts and Vertex flue assemblies as required to achieve the desired flue length (for fitting Vertex terminal see Frame 15)

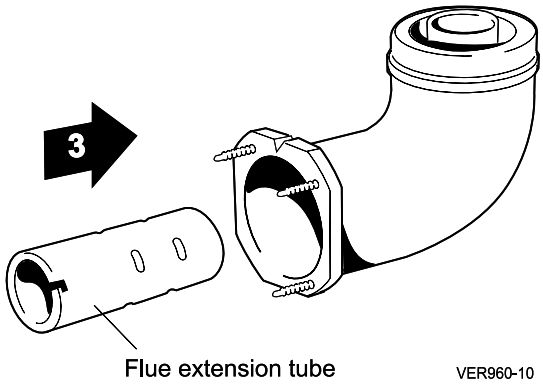

7. Where the flue passes through the ceiling stick the length of foam sealing tape (provided) around the flue, in order to seal the gap between the flue and the ceiling before fitting the ceiling plate.

8. Where the flue passes through a ceiling, a ceiling plate should be fitted, using the plugs and screws provided. The plate can be fitted during or after assembling the flue.

9. Fit a secondary flue system. Refer to Frame 4.

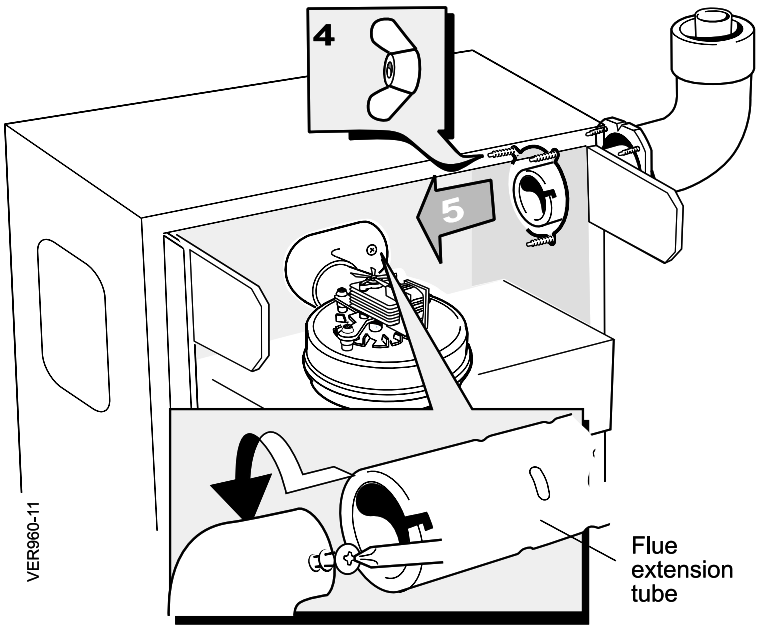

17 FLUE ASSEMBLY - *Side and rear outlet* *continued*

IF A HORIZONTAL RUN OF FLUE DUCT IS REQUIRED BEFORE FITTING THE FLUE ELBOW:

10. Determine the position of the vertical flue run, to calculate the required length of the horizontal flue run. Cut the outer flue duct to size.

11. Fit the boiler sealing ring inside the outer flue duct and ensure it is fully engaged.

12. Drill three 3.2 mm holes through the connector and the elbow kit outer flue duct. **Do not drill the inner flue duct.**

13. Secure the outer flue duct with the screws provided.

14. Cut the inner flue duct to the required size.

15. Fit the inner flue duct to the elbow.

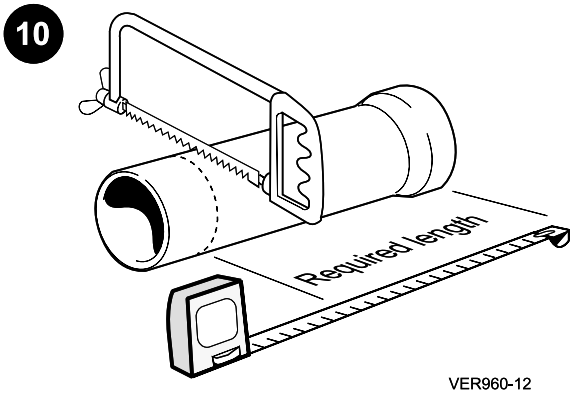

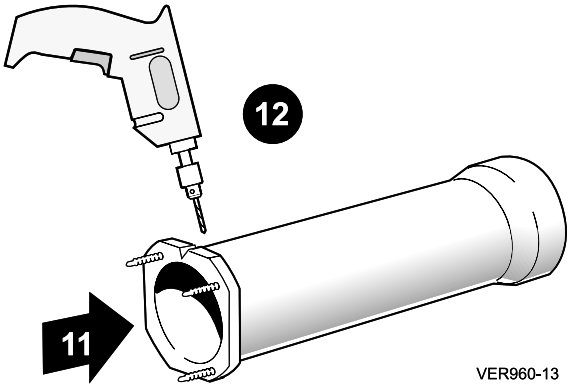

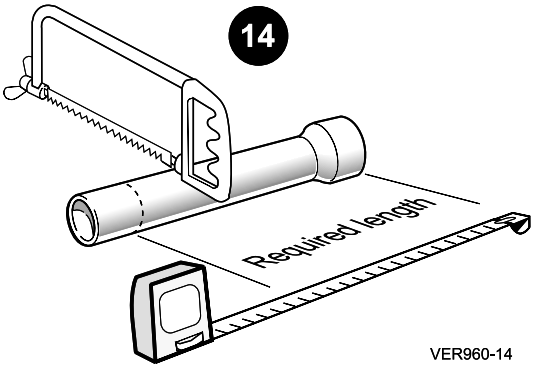

16. Fit the elbow assembly to the outer flue duct/ sealing ring.

17. Drill 3 - 3.2mm holes through the outer flue duct / the elbow flue and secure with the screws. **Do NOT drill the inner flue duct.**

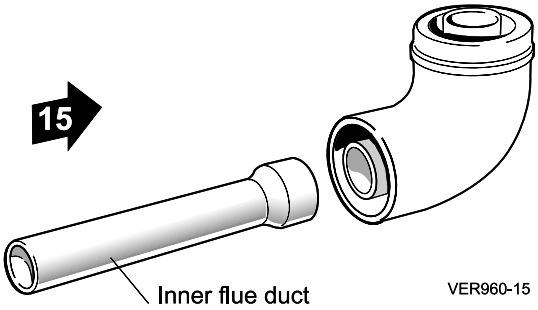

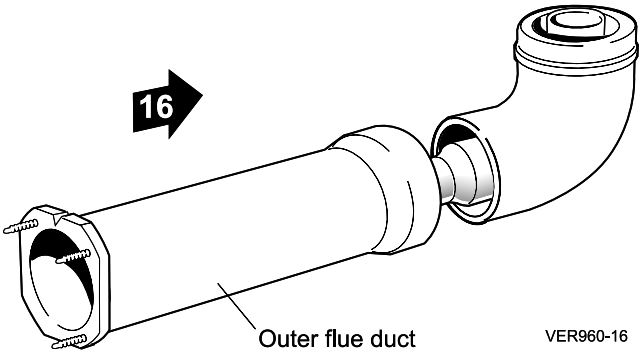

18 FLUE ASSEMBLY - *Side and rear outlet* *continued*

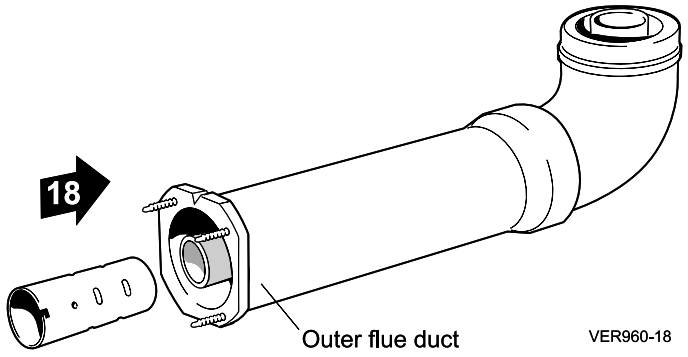

18. Push the extension flue tube fully onto the inner flue duct of the extension duct.

19. Fit the sealing ring /duct assembly to the side of the boiler and fasten with the 3 wing nuts.

20. Pull the flue extension tube to engage with the flue 90° outlet elbow and fasten securely with the screw.

21. Fit further D pack extension ducts and Vertex flue assemblies as required to achieve the desired flue length (for fitting the Vertex terminal refer to Frame 15)

22. Where the flue passes through the ceiling into the roof space stick the length of foam sealing tape (provided) around the flue, in order to seal the gap between the flue and the ceiling plate.

23. Where the flue passes through a ceiling, a ceiling plate should be fitted, using the plugs and screws provided. The plate can be fitted during or after assembling the flue.

24. Fit a secondary flue system (Refer to Frame 4).

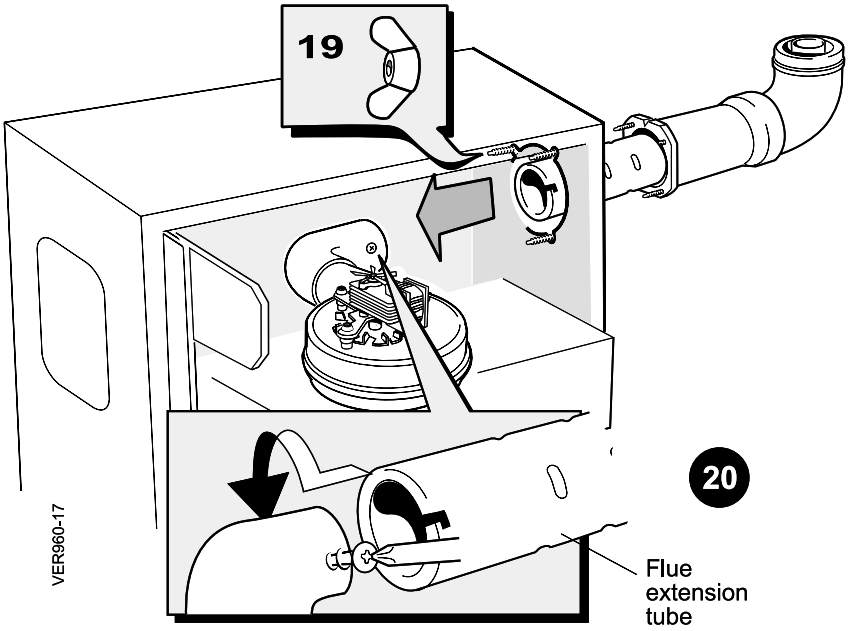

19 FINAL FIXING NOTES

1. Instruct the user not to store anything in the roof space adjacent to the grilles in the Vertex flue or to block off any purpose-designed ventilation openings in the roof space.

2. Having completed the flue assembly, proceed with the boiler installation, referring to the boiler's Installation & Servicing Instructions.

back

Ideal Boilers, P.O. Box 103, National Ave, Kingston upon Hull, HU5 4JN. Telephone: 01482 492 251 Fax: 01482 448 858. Registration No. London 322 137.

Caradon Ideal Limited pursues a policy of continuing improvement in the design and performance of its products. The right is therefore reserved to vary specification without notice.

BOILERS Ideal

ENGINEERED FOR PEACE OF MIND

May 2002 UIN 157 986 A02

Caradon

Ideal Limited

Ideal Installer/Technical Helpline: 01482 498663

www.idealboilers.com